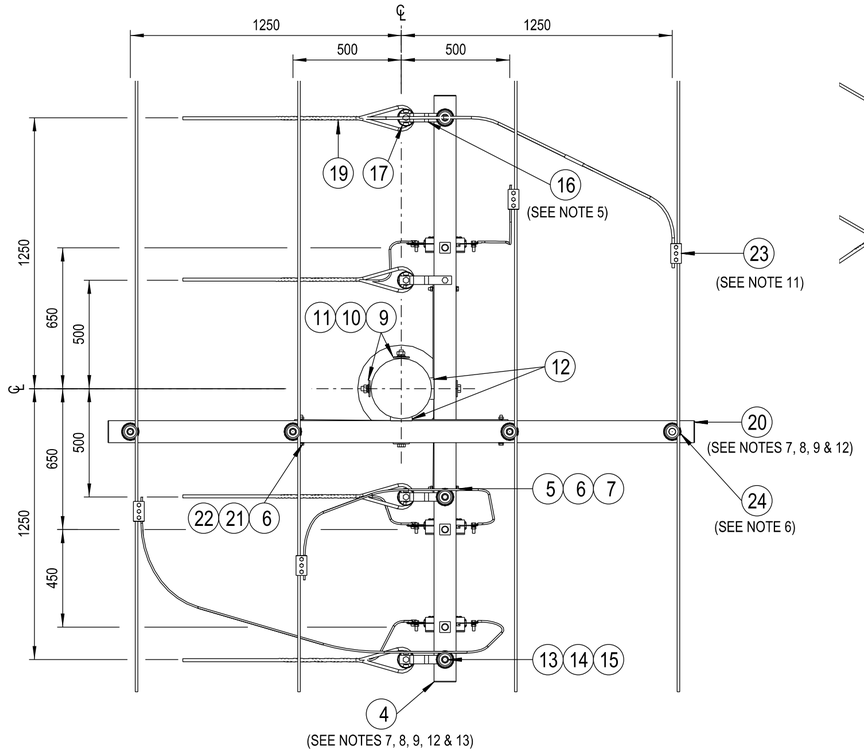

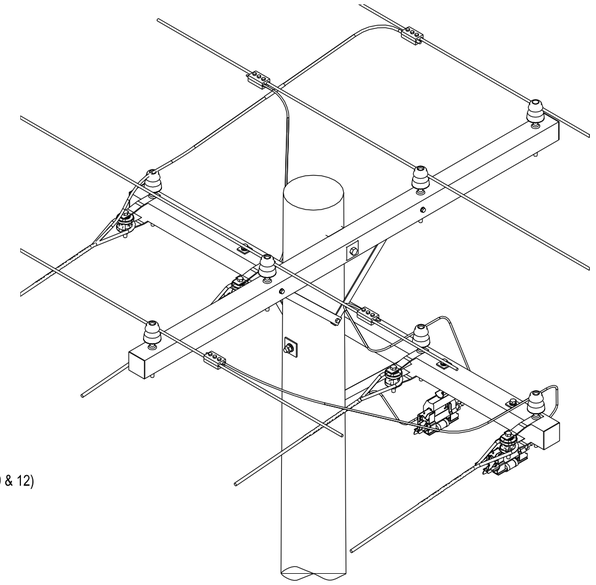

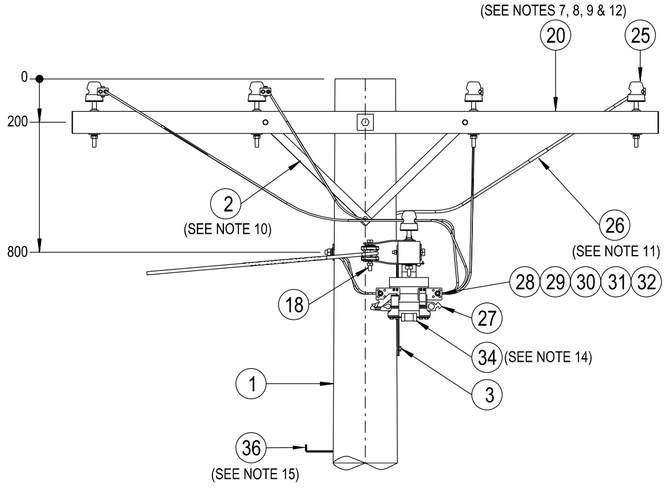

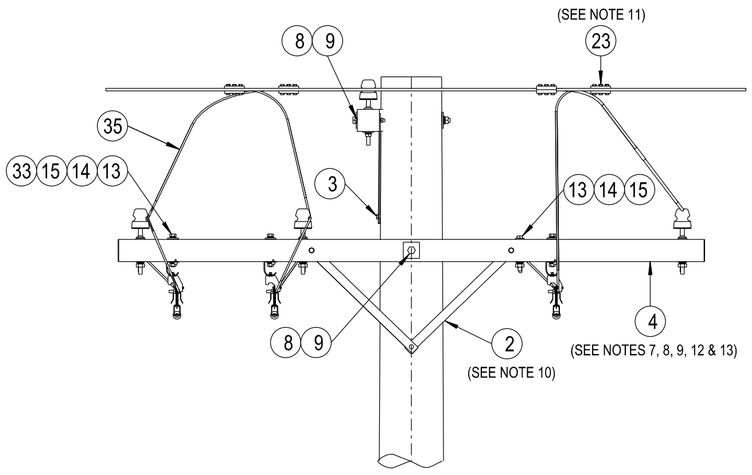

NOTES :

1. THE FOLLOWING INFORMATION IS OBTAINED FROM THE PROJECT DESIGN DRAWINGS:
   a. POLE LENGTH AND STRENGTH.
   b. SPECIAL FOUNDATION REQUIREMENTS.
   c. POLE EMBEDMENT DEPTH.
   d. CONDUCTOR SIZE.
   e. CROSSARM SIZE AND BRACE REQUIREMENTS.
   f. STAY REQUIREMENTS.
   g. DEVIATION ANGLE.
2. THE MAXIMUM LINE DEVIATION ANGLE TO BE CONSTRUCTED ON THIS ARRANGEMENT IS TO BE DETERMINED BY THE LINE DESIGNER.
3. ALL BOLTS AND INSULATOR PINS PASSING THROUGH TIMBER ARE TO BE COATED WITH GRAPHITE GREASE.
4. POLES SHALL BE DRILLED, SCARFED AND DRESSED ON SITE. DRILLING AND SCARFING TO BE TREATED WITH APPROVED PRESERVATIVES.
5. THE SHACKLE STRAP IS TO BE FORMED TO SUIT THE CROSSARM AND INSULATOR.
6. IF THE CONDUCTOR DEVIATES AT THE INSULATOR, USE THE ANGLE TYPE CONDUCTOR TIE ARRANGEMENT. OTHERWISE, USE THE INTERMEDIATE TYPE CONDUCTOR TIE ARRANGEMENT AS SHOWN ON DRG: 514044.
7. A COMPOSITE FIBRE CROSSARM IS TO BE USED AS THE PREFERED OPTION FOR THE INTERMEDIATE CROSSARM UNDER NORMAL CIRCUMSTANCES.
8. A 2706mm COMPOSITE FIBRE INTERMEDIATE CROSSARM AND A 2700mm HARDWOOD TERMINATION CROSSARM IS TO BE USED AS THE DEFAULT CROSSARMS. FOR NARROW FEEDER ALIGNMENTS, A SHORTER CROSSARM MAY BE CONSIDERED TO OVERCOME DESIGN AND SITE CONSTRAINTS.
9. ONLY THE 2706mm COMPOSITE FIBRE INTERMEDIATE AND 2700mm HARDWOOD TERMINATION CROSSARM OPTION IS SHOWN ON THIS CONSTRUCTION DRAWING. REFER TO DRGS: 262732, 514373, 15233 & 514374 FOR DRILLING PATTERN OF ALTERNATE CROSSARMS. ADDITIONAL Ø18mm HOLES WILL BE REQUIRED TO BE DRILLED IN THE TOP OF THE ALTERNATE TERMINATION CROSSARM 150mm FROM THE PHASE CONDUCTOR ATTACHMENT LOCATIONS TO MOUNT THE LV FUSE BASES.
10. THE 690mm CROSSARM BRACES ARE TO BE USED ON A 2706mm, 2106mm, 2700mm & 2100mm CROSSARM.
    THE 490mm CROSSARM BRACES ARE TO BE USED ON A 2406mm & 2400mm CROSSARM.
11. BI-METALLIC PARALLEL GROOVE CLAMPS ARE NOT TO BE INSTALLED ON TENSIONED CONDUCTORS. IF JOINING ALUMINIUM AND COPPER CONDUCTOR, A PARALLEL GROOVE CLAMP AND CONDUCTOR TAIL TO SUIT THE TENSIONED CONDUCTOR MATERIAL IS TO BE INSTALLED. THE ALUMINIUM AND COPPER CONDUCTORS ARE JOINED WITH A BI-METALLIC COMPRESSION LINK INSTALLED IN THE NON-TENSIONED CONDUCTOR TAPPING.
12. FOR DETAILS OF APPROVED ALTERNATE WAGNER COMPOSITE FIBRE CROSSARMS, REFER TO DRG: 265964.
13. WHEN SPECIFYING WAGNER COMPOSITE FIBRE CROSSARMS, A REVIEW OF ALL THE HARDWARE ATTACHED TO THE CROSSARM WILL BE REQUIRED.
14. THE LV FUSE RATING IS TO BE DETERMINED BY THE LINE DESIGNER WITH REFERENCE TO AUSGRID'S TECHNICAL GUIDE T0024 - TS4200 FUSE STANDARD.
15. POLE STEPS ARE TO BE INSTALLED IN ACCORDANCE WITH THE REQUIREMENTS OF NS128.
16. REFER TO DESIGNER SAFETY REPORT D25/189605 FOR ATYPICAL HAZARDS ASSOCIATED WITH THIS STANDARD CONSTRUCTION.

ITEM	DESCRIPTION	DRG. No	STOCK CODE	QTY
36	STEP - POLE, SCREW-IN (SEE NOTE 15)	250144	185198	A/R
35	CONDUCTOR - BARE, OVERHEAD (SIZE & TYPE TO SUIT OTHER CONDUCTORS)			A/R
34	FUSE - HRC, 415V, 2 HOLE BOLT-IN (111mm FIXING CENTRES) (SEE NOTE 14)			3
33	WASHER - SQUARE, 50x50x6mm, GALVANISED (Ø18mm HOLE)	518081	H39257	3
32	NUT - M12, HEX., STAINLESS STEEL	515467	8987	6
31	WASHER - SPRING, M12, STAINLESS STEEL	518082	143859	6
30	WASHER - FLAT, M12, STAINLESS STEEL	518081	49429	12
29	BOLT - M12x40mm, HEX., STAINLESS STEEL	515467	45146	6
28	LUG - M12, COMPRESSION (TO SUIT CONDUCTOR)	514053		6
27	BASE & CARRIER - FUSE, LV, 630A, SINGLE CIRCUIT	117077	90522	3
26	LINK - BI-METALLIC, COMPRESSION (TO SUIT CONDUCTORS) (SEE NOTE 11)	514053		1
25	INSULATOR - LV, (LPLV PATTERN 'B') & PIN ARRANGEMENT	513995		7
24	TIE - CONDUCTOR, LOW VOLTAGE, SUPPORT ARRANGEMENT (SEE NOTE 6)	514044		7m
23	CLAMP - PARALLEL GROOVE (TO SUIT CONDUCTOR) (SEE NOTE 11)	514099		4
22	WASHER - CONICAL, M12, GALVANISED (USE WITH HARDWOOD CROSSARM)	518082	H39639	2
	WASHER - SPRING, M12, GALVANISED (USE WITH COMPOSITE FIBRE CROSSARM)	518082	H12047	
21	BOLT & NUT - M12x130mm, HEX., GALVANISED	515466	46805	2
20	CROSSARM - 2100x100x100mm, TYPE A, HARDWOOD (SEE NOTES 7, 8, 9 & 12)	514374	H23818	1
	CROSSARM - 2400x100x75mm, TYPE L3, HARDWOOD (SEE NOTES 7, 8, 9 & 12)	15233	89912	
	CROSSARM - 2700x100x100mm, TYPE D, HARDWOOD (SEE NOTES 7, 8, 9 & 12)	514373	H23868	
	CROSSARM - 2106x102x102mm, TYPE 1, COMPOSITE FIBRE (SEE NOTES 7, 8, 9 & 12)	262732	186771	
	CROSSARM - 2406x102x102mm, TYPE 2, COMPOSITE FIBRE(SEE NOTES 7, 8, 9 & 12)	262732	186772	
	CROSSARM - 2706x102x102mm, TYPE 3, COMPOSITE FIBRE (SEE NOTES 7, 8, 9 & 12)	262732	186773	
19	DEADEND - PREFORMED, HELICAL (TO SUIT CONDUCTOR)	514098		4
18	BOLT & NUT - M16x130mm, HEX., GALVANISED	515466	46979	4
17	INSULATOR - SHACKLE, REEL, TYPE SH.LV2	514407	75812	4
16	BRACKET - MOUNTING, SHACKLE, LV FLAT, GALVANISED (SEE NOTE 5)	514379	H17762	8
15	WASHER - FLAT, M16, GALVANISED	518081	177984	5
14	WASHER - CONICAL, M16, GALVANISED (USE WITH HARDWOOD CROSSARMS)	518082	H39647	4
13	BOLT & NUT - M16x150mm, HEX., GALVANISED	515466	175672	4
12	BLOCK - GAIN, ALUMINIUM, 100mm		146274	2
11	WASHER - FLAT, M20, GALVANISED	518081	177986	2
10	WASHER - CONICAL, M20, GALVANISED	518082	H39655	2
9	WASHER - SQUARE, 75x75x6mm, GALVANISED (Ø22mm HOLE)	518081	H39231	4
8	BOLT & NUT - M20, HEX., GALVANISED (LENGTH TO SUIT POLE)	515466		2
7	WASHER - CONICAL, M12, GALVANISED	518082	H39639	2
6	WASHER - FLAT, M12, GALVANISED	518081	177982	8
5	BOLT & NUT - M12x150mm, HEX., GALVANISED (USE WITH 2400mm CROSSARM)	515466	46847	2
	BOLT & NUT - M12x180mm, HEX., GALVANISED (USE WITH 2700mm CROSSARM)	515466	46888	
4	CROSSARM - 2400x125x100mm, TYPE LT3, HARDWOOD (SEE NOTES 7, 8, 9, 12 & 13)	15233	71746	1
	CROSSARM - 2700x150x100mm, TYPE F, HARDWOOD (SEE NOTES 7, 8, 9, 12 & 13)	514373	H23892	
3	SCREW - COACH, M12 x 100mm, GALVANISED		H40484	2
2	BRACE - CROSSARM, FLAT, TYPE L, 490mm, GALVANISED (SEE NOTE 10)	46	76745	4
	BRACE - CROSSARM, FLAT, 690mm, GALVANISED (SEE NOTE 10)	514385	H17738	
1	POLE - TIMBER (AS REQUIRED)	513988		1

ALL DIMENSIONS IN MILLIMETRES UNLESS NOTED OTHERWISE. DO NOT SCALE.

CAD DRAWING
DO NOT MANUALLY AMEND
AMENDMENTS

COMPOSITE FIBRE CROSSARMS WAGNER SPECIFICATION	265964
2700mm CROSSARMS FOR LV, 11kV, 22kV & 33kV CONSTRUCTION DETAILS	514373
COMPOSITE FIBRE CROSSARMS SPECIFICATION	262732
LV CONDUCTOR TIE & SUPPORT ARRANGEMENTS	514044
WOODEN CROSSARMS FOR 415V OVERHEAD MAINS	15233
WOODEN CROSSARMS FOR LV, 11kV & 33kV CONSTRUCTION DETAILS	514374

ASSOCIATED DRAWINGS

NETWORK STANDARD
Ausgrid
42 HONEYSUCKLE DRIVE,
NEWCASTLE WEST NSW 2300

SCALE	1:20
DESIGNED	P.JONES
DRAWN	P.RIOS
CHECKED	C.ROSKELL
APPROVED	G.FORD
DATE	12/08/2025
PROJECT NUMBER	STD
TRIM REF NUMBER	-

STANDARD CONSTRUCTION
LV TEE OFF CONSTRUCTION
WITH LV FUSES
1-61

SIZE	DRAWING No	SHEET	REV
A2	271398	1	0

20241022

271398-1.dgn 8/12/2025 12:15:14 PM