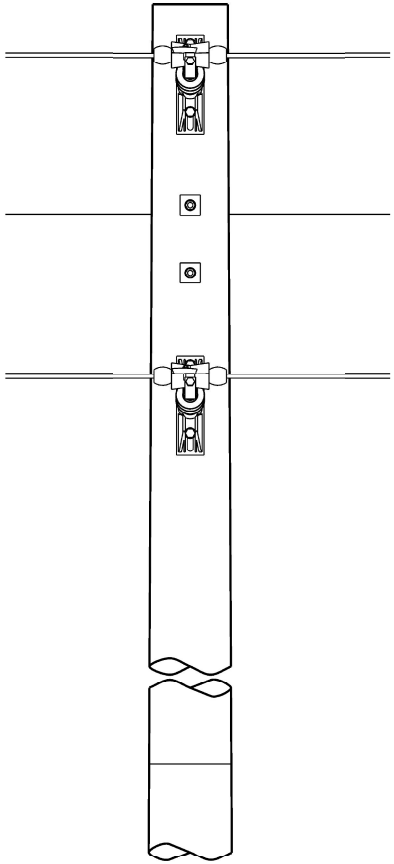

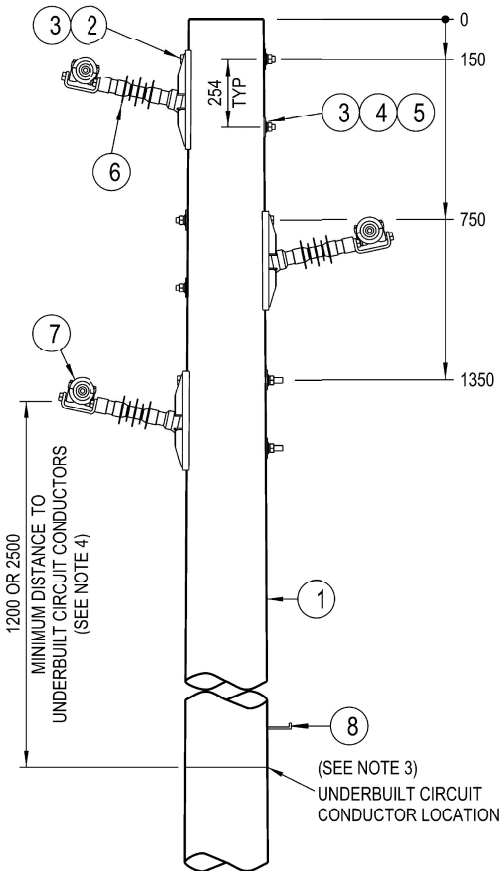

NOTES :

1. THE FOLLOWING INFORMATION IS OBTAINED FROM THE PROJECT DESIGN DRAWINGS:
   a. POLE LENGTH AND STRENGTH.
   b. SPECIAL FOUNDATION REQUIREMENTS.
   c. POLE EMBEDMENT DEPTH.
   d. CONDUCTOR SIZE.
   e. STAY REQUIREMENTS.
   f. DEVIATION ANGLE.
   g. ASSESSED EARTHING REQUIREMENTS.
2. THE MAXIMUM LINE DEVIATION ANGLE TO BE CONSTRUCTED ON THIS ARRANGEMENT IS TO BE DETERMINED BY THE LINE DESIGNER.
3. POLE STEPS ARE TO BE INSTALLED IN ACCORDANCE WITH THE REQUIREMENTS OF NS128.
4. IN AREAS WHERE THE 22kV NETWORK CANNOT BE WORKED ON USING LIVE LINE TECHNIQUES, UNDERBUILT CIRCUITS SHALL BE INSTALLED WITH A MINIMUM CLEARANCE OF 1200mm. IN AREAS WHERE THE 22kV NETWORK CAN BE WORKED ON USING LIVE LINE TECHNIQUES, UNDERBUILT CIRCUITS SHALL BE INSTALLED WITH A MINIMUM CLEARANCE OF 2500mm.
5. POLES SHALL BE DRILLED, SCARFED AND DRESSED ON SITE. DRILLING AND SCARFING TO BE TREATED WITH APPROVED PRESERVATIVES.
6. ALL BOLTS PASSING THROUGH TIMBER ARE TO BE COATED WITH GRAPHITE GREASE.
7. REFER TO DESIGNER SAFETY REPORT D21/48679 FOR ATYPICAL HAZARDS ASSOCIATED WITH THIS STANDARD CONSTRUCTION.

ITEM	DESCRIPTION	DRG. No	STOCK CODE	QTY
8	STEP - POLE, SCREW-IN (SEE NOTE 3)	250144	185198	A/R
7	CLAMP - SUPPORT, ARMOUR GRIP (TO SUIT CONDJCTOR)	514132		3
6	INSULATOR - 22kV POST, CLAMP TOP, MOUNTED ON GAIN BASE BRACKET		178293	3
5	WASHER - FLAT, M20, GALVANISED	518081	177986	6
4	WASHER - CONICAL, M20, GALVANISED	518082	H39655	6
3	WASHER - SQUARE, 75x75x6mm, GALVANISED (Ø22mm HOLE)	518081	H39231	12
2	BOLT & NUT - M20, HEX., GALVANISED (LENGTH TO SUIT POLE)	515466		6
1	POLE - TIMBER (AS REQUIRED)	513988		1

ALL DIMENSIONS IN MILLIMETRES UNLESS NOTED OTHERWISE. DO NOT SCALE.

CAD DRAWING
DO NOT MANUALLY AMEND

AMENDMENTS

1	DWN: PATRICIA RIOS	CHKED: PHILLIP JONES	DATE: 14/01/2020 NOTES AMENDED. MATERIAL LIST UPDATED.
	APP'D by: GLENN FORD		
2	DWN: PATRICIA RIOS	CHKED: PHILLIP JONES	DATE: 18/02/2021 NOTES AMENDED. MATERIAL LIST UPDATED.
	APP'D by: GLENN FORD		

NETWORK STANDARD
Ausgrid
145 NEWCASTLE RD WALLSEND, NSW 2287

SCALE	1:20
DESIGNED	PHIL JONES
DRAWN	PATRICIA RIOS
CHECKED	PHIL JONES
APPROVED	STEPHEN CONNOR
DATE	12/09/07
PROJECT NUMBER	STD
PROJTRAK NUMBER	

STANDARD CONSTRUCTION
22kV VERTICAL DELTA
CONSTRUCTION
3-200

SIZE	DRAWING No	SHEET	AMD
A3	184958	01	2

20110901