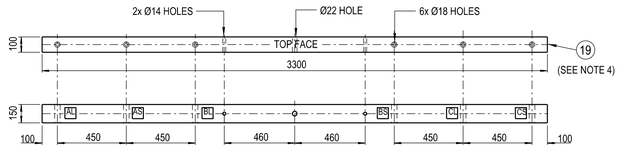

DETAIL 4
CROSSARM ITEM 19
TIMBER CROSSARM 3300 x 150 x 100mm
SCALE 1:20

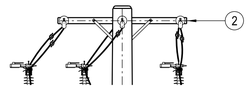

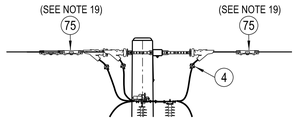

ARRANGEMENT 3
WITH CCT OVERHEAD CONDUCTORS

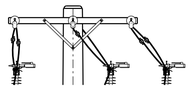

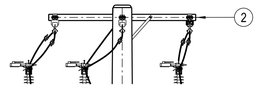

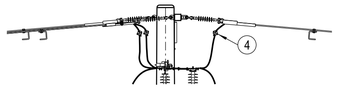

ARRANGEMENT 2
WITH CCSX OVERHEAD CONDUCTORS

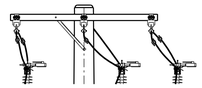

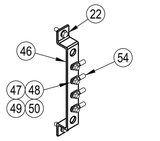

ITEM 46
TOP EARTH BAR

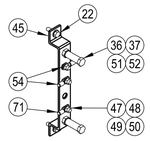

ITEM 45
BOTTOM EARTH BAR

DETAIL 1
NOT TO SCALE

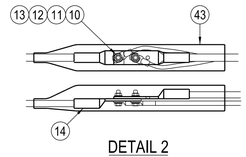

DETAIL 2
SCALE 1:5

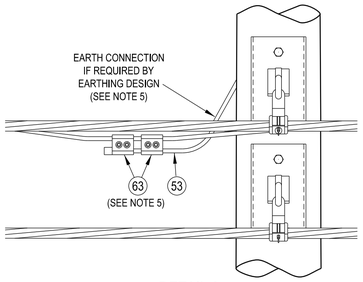

DETAIL 3
LV ABC NEUTRAL CONNECTION
(SEE NOTE 5)
SCALE 1:10

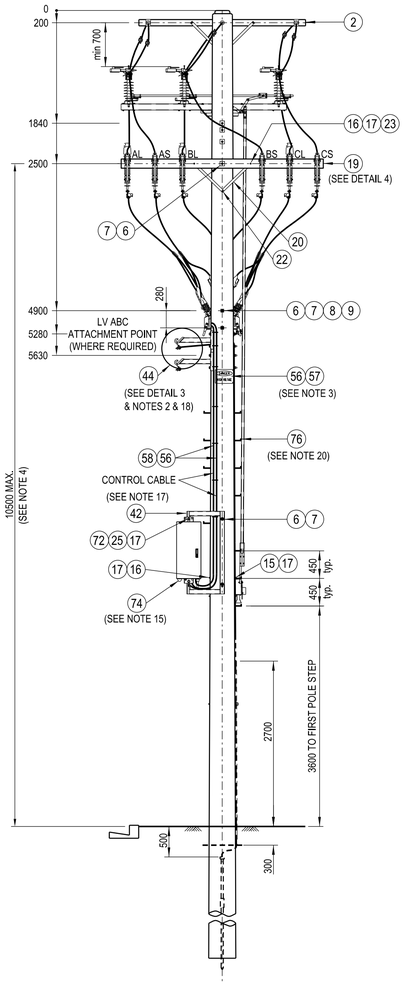

REAR VIEW
SCALE 1:50

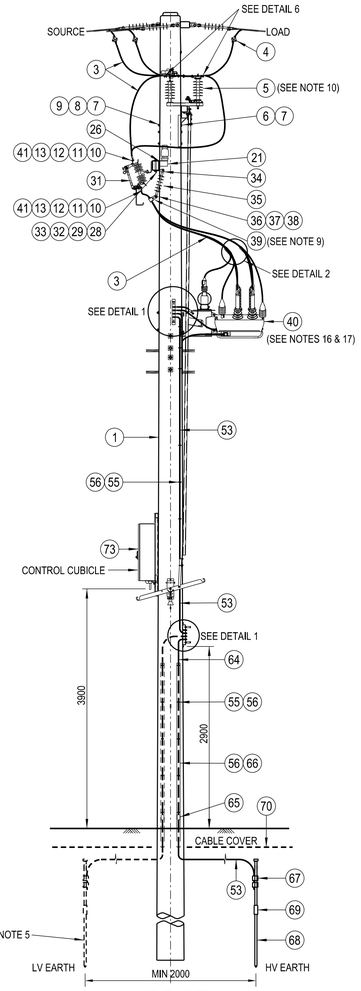

SIDE VIEW
SCALE 1:50

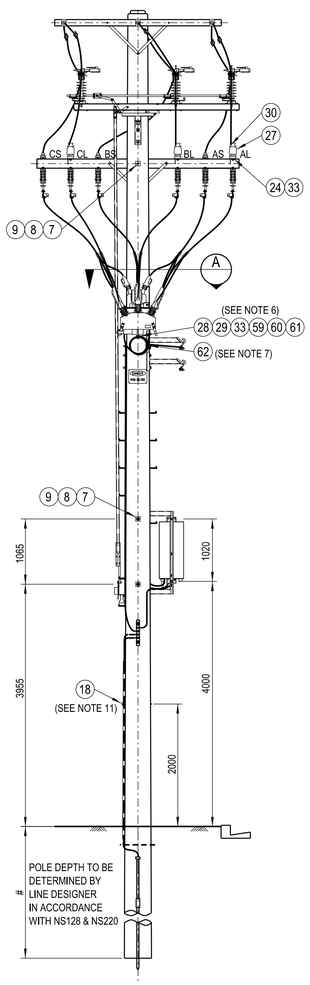

FRONT VIEW
SCALE 1:50

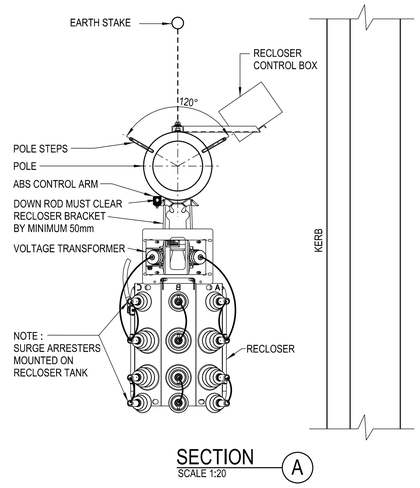

SECTION A
SCALE 1:20

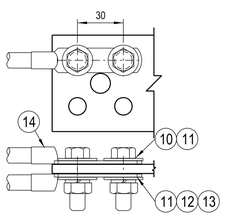

DETAIL 6
TWO BOLT TERMINATION
SCALE 1:2

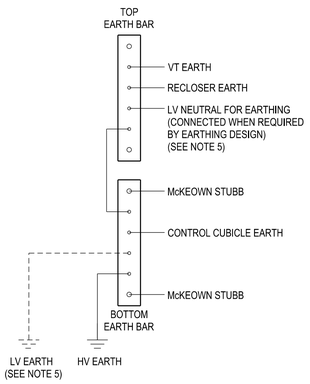

EARTHING SCHEMATIC

NOTES:

1. THE MINIMUM 11kV PHASE TO EARTH CLEARANCE IS 200mm. THE MINIMUM 11kV PHASE TO PHASE CLEARANCE IS 280mm.
2. WHERE BARE LV MAINS EXIST, THEY SHALL BE CONVERTED TO ABC FOR AT LEAST ONE SPAN EITHER SIDE OF THE RECLOSER. IF LV MAINS ARE PRESENT ON THE POLE, A 1-80 LV ABC INTERMEDIATE CONSTRUCTION MUST BE USED.
3. DANGER SIGNS (ITEM 57) ARE TO BE INSTALLED ON BOTH FRONT AND REAR OF THE POLE. SIGNS MUST BE BENT AROUND POLE BEFORE SECURING.
4. THE DROPOUT FUSE CROSSARM SHOULD NOT BE MOUNTED MORE THAN 10.5m ABOVE GROUND LEVEL TO ENABLE THE FUSES TO BE OPERATED FROM GROUND LEVEL WITH A LINK STICK. IF A GREATER MOUNTING HEIGHT IS REQUIRED TO MAINTAIN CLEARANCES, THE REGIONAL FIELD OPERATING GROUP NEED TO BE CONSULTED.
5. MOST NOJA RECLOSER INSTALLATIONS WILL ONLY REQUIRE A HV EARTH ARRANGEMENT. IF LV CONDUCTORS ARE ATTACHED TO THE POLE AND THE SITE SPECIFIC EARTHING DESIGN REQUIRES THE LV NEUTRAL CONDUCTOR BE CONNECTED TO THE RECLOSER EARTHING SYSTEM, DETAIL 3 SHOULD BE USED FOR THE CONNECTION AND THE LV EARTH ARRANGEMENT INSTALLED TO CREATE A COMBINED HV/LV EARTHING SYSTEM. IF TWO LV MAINS CONDUCTORS ARE ON THE POLE, ONLY ONE LV NEUTRAL CONDUCTOR IS TO BE CONNECTED TO THE TOP EARTH BAR.
6. AFTER INSTALLATION OF THE RECLOSER AND CONTROL CUBICLE, THE OSM CONTROL CABLE AND VT OUTPUT CABLE THAT ARE SUPPLIED WITH THE RECLOSER ARE TO BE CONNECTED TO THE CONTROL CUBICLE VIA THE GLANDS AT THE BOTTOM OF THE CONTROL CUBICLE. ENSURE CABLE ROUTE DOES NOT HINDER PLACEMENT OF A LADDER ON THE POLE TO ACCESS CUBICLE. TYPICALLY CABLES TO ENTER BEHIND CUBICLE MOUNTING BRACKET. EXCESS CABLE IS TO BE COILED ON A CABLE STORAGE BRACKET BELOW THE RECLOSER. REFER TO THE MANUFACTURERS TECHNICAL DOCUMENTATION FOR FURTHER INFORMATION.
7. THE EXCESS CONTROL CABLING MUST BE SUITABLY SECURED TO THE CABLE STORAGE BRACKET WITH STAINLESS STEEL CABLE TIES. THE BOTTOM OF THE COIL MUST BE SECURED TO AVOID SWINGING IN THE WIND.
8. THE RECLOSER CONTROL CABLING MUST BE ATTACHED TO THE POLE A MINIMUM OF 200mm FROM ANY EARTHING DOWNLEAD CABLE.
9. THE SUSPENSION CLAMP (ITEM 39) MUST PROVIDE A FIRM CONNECTION TO THE HV DROPPER CABLE. IF REQUIRED, CONDUIT INSERTS MAY BE USED TO ACHIEVE AN EFFECTIVE CONNECTION.
10. THE AIR BREAK SWITCH OPERATING MECHANISM MUST BE INSTALLED ON THE FOOTPATH SIDE OF THE POLE. INSTALLATION ON THE ROAD SIDE OF THE POLE IS NOT ACCEPTABLE.
11. EYE COACH SCREW TO BE INSTALLED 2m ABOVE GROUND LEVEL ON FOOTPATH SIDE OF POLE FOR ATTACHMENT OF OPERATORS "DANGER DO NOT OPERATE" TAG.
12. A SITE SPECIFIC EARTHING DESIGN IS REQUIRED FOR EACH RECLOSER INSTALLATION.
13. THE EARTHING SHOWN ON THIS DRAWING IS INDICATIVE ONLY. ADDITIONAL EARTHING MAY BE REQUIRED TO MEET THE EARTHING DESIGN REQUIRMENTS.
14. ENSURE BURIED EARTH CONDUCTORS ARE CENTRED UNDER CABLE PROTECTION COVER.
15. AN EXTERNAL ANTENNA CAN BE INSTALLED WHERE REQUIRED. THE ACTUAL LOCATION OF THE ANTENNA IS TO BE DETERMINED DURING INSTALLATION OF COMMUNICATION EQUIPMENT. THE LOCATION IS ALWAYS TO COMPLY WITH THE MINIMUM SAFE WORKING DISTANCES SPECIFIED IN AUSGRID'S ELECTRICAL SAFETY RULES.
16. THE NOJA RECLOSER TERMINALS ARE LABELLED A, B, C ON THE SOURCE SIDE OF THE RECLOSER AND R, S, T ON THE LOAD SIDE OF THE RECLOSER.
17. THE NOJA CONTROL CUBICLE CAN BE MOUNTED IN ANY ORIENTATION ON THE POLE THAT SUITS THE INSTALLATION LOCATION. THE DESIGNER MUST CONSIDER OPERATOR SAFETY, CONTROL CUBICLE SECURITY AND ABS OPERATING HANDLE CLASHING BEFORE SPECIFYING THE CONTROL CUBICLE ORIENTATION. THE REGIONAL FIELD OPERATING GROUP SHOULD BE CONSULTED WHEN CONSIDERING OPTIONS FOR THE RECLOSER LOCATION AND CONTROL CUBICLE ORIENTATION.
18. THE LV ABC CONSTRUCTION CAN BE ATTACHED HIGHER ON THE POLE AS LONG AS A MINIMUM CLEARANCE OF 700mm CAN BE MAINTAINED BETWEEN THE LV CONDUCTOR AND THE 11kV NOJA CONNECTIONS.
19. WHERE 11kV CCT CONDUCTORS EXIST, STANDARD EARTHING POINTS AND COVERS ARE TO BE INSTALLED AS DETAILED IN NS126.
20. POLE STEPS SHOULD ONLY BE INSTALLED ON POLES WHERE ACCESS FOR NORMAL MAINTENANCE VEHICLES CANNOT BE MAINTAINED FOR THE LIFE OF THE POLE. IF POLE STEPS ARE INSTALLED, THEY ARE TO COMPLY WITH THE REQUIREMENTS OF NETWORK STANDARD NS128.
21. REFER TO DESIGNER SAFETY REPORT D22/109578 FOR ATYPICAL HAZARDS ASSOCIATED WITH THIS STANDARD CONSTRUCTION.

ITEM	DESCRIPTION	DRG. No	STOCK CODE	ARR-1	ARR-2	ARR-3
				QTY		
76	STEP - POLE, SCREW-IN (SEE NOTE 20)	250144	185198	A/R	A/R	A/R
75	COVER - CCT, EARTHING POINT (SEE NOTE 19)	144741				6
74	ANTENNA - LTE MIMO, GPS COMBO (SEE NOTE 15)		185409	1	1	1
73	MODEM - SIERRA, WIRELESS, RV50X		185100	1	1	1
72	WASHER - SPRING, M12, GALVANISED	518082	H12047	2	2	2
71	LUG - COMPRESSION, BI-METALLIC, M12 HOLE (TO SUIT MERCURY CONDUCTOR)	514053	H19675	1	1	1
70	COVER - CABLE, PROTECTOR, 150mm WIDE (SEE NOTE 14)		151084	A/R	A/R	A/R
69	COUPLER - EARTH ELECTRODE (TO SUIT Ø15mm ROD)		H31649	A/R	A/R	A/R
68	ELECTRODE - DRN EN EARTH, Ø15x1800mm		H31631	A/R	A/R	A/R
67	CONNECTOR - COMPRESSION, PROFILE 6, COPPER (70mm² CONDUCTOR TO Ø15mm ROD)		H31699	2	2	2
66	GUARD - EARTH, COVER, 3m, BLACK, PVC		157552	1	1	1
65	LINK - COMPRESSION, BI-METALLIC (MERCURY (7/4.5AAC) TO 19/2.14 (70mm²) Cu CABLE)		187132	1	1	1
64	CONDUCTOR - MERCURY, 7/4.5AAC		H13433	A/R	A/R	A/R
63	CONNECTOR - INSULATION PIERCING, 95-150 LV ABC/95-150 LV ABC (SEE NOTE 5)		176591	2	2	2
62	STRAP - TIEDOWN, CABLE, 520x4.6mm, STAINLESS STEEL (SEE NOTE 7)		182644	A/R	A/R	A/R
61	SCREW - COACH, M16x100mm, GALVANISED		H40692	1	1	1
60	BOLT & NUT - M16, HEX, GALVANISED (LENGTH TO SUIT POLE)	515466		1	1	1
59	BRACKET - CABLE STORAGE, ADSS, FIBERLIGN (PLP PART No. OFSCCM-02-400) (SEE NOTE 6)			1	1	1
58	SADDLE - CABLE, DOUBLE SIDED, GALVANISED (TO SUIT NOJA CONTROL CABLE)			A/R	A/R	A/R
57	SIGN - DANGER HIGH VOLTAGE (SEE NOTE 3)		H47012	2	2	2
56	SCREW - #12x45mm, SELF DRILLING		175567	A/R	A/R	A/R
55	SADDLE - CABLE, 12.7mm, HEAVY DUTY, DOUBLE SIDED, GALVANISED		176494	A/R	A/R	A/R
54	LUG - COMPRESSION, COPPER, Ø14mm HOLE (TO SUIT 70mm² CABLE)		74831	9	9	9
53	CONDUCTOR - 19/2.14(70mm²) COPPER, PVC COVERED, BLACK		60111	A/R	A/R	A/R
52	WASHER - SPRING, M16, STAINLESS STEEL	518082	96149	2	2	2
51	STUBB - EARTH, McKEOWN	520088	H108415	2	2	2
50	NUT - M12, HEX., STAINLESS STEEL	515467	8987	7	7	7
49	WASHER - SPRING, M12, STAINLESS STEEL	518082	143859	7	7	7
48	WASHER - FLAT, M12, STAINLESS STEEL	518081	49429	14	14	14
47	SCREW - SET, M12x30mm, HEX., STAINLESS STEEL	515467	H38528	7	7	7
46	BAR - EARTH, TOP, FLAT, TINNED COPPER, 50.8x6.3mm (SEE DETAIL 1)	222406	182110	1	1	1
45	BAR - EARTH, BOTTOM, FLAT, TINNED COPPER, 50.8x6.3mm (SEE DETAIL 1)	222406	182110	1	1	1
44	CONSTRUCTION - LV, OVERHEAD, ABC, INTERMEDIATE, 1-80 (SEE NOTES 2 & 18)	206544		1	1	1
43	COVER - ANIMAL PROTECTION (3 PHASE SET) (NKT PART NO. : CE-APC-T1)		186486	2	2	2
42	BRACKET - CONTROL BOX, OFFSET MOUNTING (AS PER ESSENTIAL ENERGY DRG. CEOM7111.83) (SEE NOTE 17)		186487	1	1	1
41	LUG - COMPRESSION, BI-METALLIC, M10 HOLE (TO SUIT CCSX159 CONDUCTOR)	514053	187551	12	12	12
40	RECLOSER - 11kV, NOJA, TYPE OSM15 (COMPLETE WITH CONTROL CUBICLE AND CONTROL CABLING) (SEE NOTES 16 & 17)		186093	1	1	1
39	CLAMP - LV, SUSPENSION (SEE NOTE 9)		H113472	6	6	6
38	NUT - M16, NYLOC, HEX., STAINLESS STEEL		177122	6	6	6
37	WASHER - FLAT, M16, STAINLESS STEEL	518081	H39621	14	14	14
36	SCREW - SET, M16x40mm, HEX., STAINLESS STEEL	515467	H38413	8	8	8
35	INSULATOR - 11/22kV, LONGROD, 70kN (CLEVIS/TONGUE)		150375	6	6	6
34	PLATE - TWISTED, 170x50x9mm, GALVANISED	151086	176901	6	6	6
33	WASHER - FLAT, M16, GALVANISED	518081	177984	17	17	17
32	BOLT & NUT - M16x200mm, HEX., GALVANISED	515466	83725	6	6	6
31	LINK - 12/24kV, 630 AMP, OUTDOOR		58750	6	6	6
30	WIRE - TIE, PREFORMED, INSULATED, FOR CCSX159 (SET OF 6) (ENSTO REF. SO216.157)		186874	3	3	3
29	WASHER - CONICAL, M16, GALVANISED	518082	H39647	7	7	7
28	WASHER - SQUARE, 50x50x6mm, GALVANISED (Ø18mm HOLE)	518081	H39257	7	7	7
27	INSULATOR - 11kV, PIN POST, SHORT STUD		144584	3	3	3
26	BLOCK - GAIN, ALUMINIUM, 150mm		146290	1	1	1
25	BOLT & NUT - M12x30mm, HEX., GALVANISED	515466	46367	2	2	2
24	WASHER - SPRING, M16, GALVANISED			3	3	3
23	BOLT & NUT - M12x130mm, HEX., GALVANISED	515466	46805	2	2	2
22	SCREW - COACH, M12x100mm, GALVANISED		H40484	5	5	5
21	BRACKET - INSULATOR MOUNTING	256243		3	3	3
20	BRACE - CROSSARM, ANGLE, TYPE H, 740mm, GALVANISED	46	99119	2	2	2
19	CROSSARM - 3300x150x100mm, HARDWOOD (SEE DETAIL 4 & NOTE 4)		H22020	1	1	1
18	BOLT - EYED LAG, M8x110mm, STAINLESS STEEL (SEE NOTE 11)		182589	1	1	1
17	WASHER - FLAT, M12, GALVANISED	518081	177982	10	10	10
16	WASHER - CONICAL, M12, GALVANISED	518082	H39639	4	4	4
15	BOLT & NUT - M12, HEX., GALVANISED (LENGTH TO SUIT POLE)	515466		2	2	2
14	LUG - COMPRESSION, BI-METALLIC, 2 x M10 HOLES (TO SUIT CCSX159 CONDUCTOR)	514053	187563	18	18	18
13	NUT - M10, HEX., STAINLESS STEEL	515467	H39401	36	36	36
12	WASHER - SPRING, M10, STAINLESS STEEL	518082	50120	36	36	36
11	WASHER - FLAT, M10, STAINLESS STEEL	518081	49411	72	72	72
10	BOLT - M10x40mm, HEX., STAINLESS STEEL	515467	45096	36	36	36
9	WASHER - FLAT, M20, GALVANISED	518081	177986	8	8	8
8	WASHER - CONICAL, M20, GALVANISED	518082	H39655	8	8	8
7	WASHER - SQUARE, 75x75x5mm, GALVANISED (Ø22mm HOLE)	518081	H39231	12	12	12
6	BOLT & NUT - M20, HEX., GALVANISED (LENGTH TO SUIT POLE)	515466		8	8	8
5	DISCONNECTOR - 12/24kV, LOAD BREAK, MODULAR (SEE NOTE 10)		H95406	1	1	1
	DISCONNECTOR - 12/24kV, LOAD BREAK, UNITISED (SEE NOTE 10)		66647			
4	JOINT - NON TENSION, IPC TO IPC (ENSTO REF. SLW26 A)		186863		6	6
	JOINT - NON TENSION, IPC TO BARE (ENSTO REF. SLW34 A)		186864	6		
3	CONDUCTOR - 11kV CCSX159, 159mm², 19/3.26 AAAC		186858	A/R	A/R	A/R
2	CONSTRUCTION - 11kV, OVERHEAD, 2-11CCT (EXCLUDING BRIDGES)	174962				1
	CONSTRUCTION - 11kV, OVERHEAD, 2-11CCSX (EXCLUDING BRIDGES)	265890			1	
	CONSTRUCTION - 11kV, OVERHEAD, 2-11 (EXCLUDING BRIDGES)	513915		1		
1	POLE - TIMBER (MINIMUM 9kN) (POLE LENGTH AS REQUIRED)	513988		1	1	1

AMENDMENTS				
CAD DRAWING DO NOT MANUALLY AMEND	DWN: P.JONES CHKED: P.JONES DATE: 08/08/2022 NEW STOCK CODES ADDED. EARTHING SYSTEM REQUIREMENTS AMENDED. NOTE 5 AMENDED.	APP'D by: DWN: P.R. CHKD: P.J. APP'D: G.F.	2 DATE: 09/02/2023 ITEM 43 DESCRIPTION AMENDED. SECTION A UPDATED.	DWN: P.R. CHKD: P.J. APP'D: G.F.
3 DATE: 20/02/2025 CCT CHANGED TO CCSX. EARTHING CHANGED TO ALUMINIUM ABOVE GROUND.	DWN: P.R. CHKD: P.J. APP'D: G.F.	4 DATE: 15/05/2025 ARRANGEMENT 3 ADDED. MATERIAL LIST & NOTES AMENDED.	DWN: P.R. CHKD: P.J. APP'D: G.F.	5 DATE: 18/09/2025 LV ABC ATTACHMENT POINT MOVED DOWN.

ASSOCIATED DRAWINGS

NETWORK STANDARD
Ausgrid
42 HONEYSUCKLE DRIVE,
NEWCASTLE WEST NSW 2300

SCALE	AS SHOWN
DESIGNED	C.MABBUTT
DRAWN	P.RIOS
CHECKED	P.JONES
APPROVED	G.FORD
DATE	06/04/2022
PROJECT NUMBER	STD
TRIM REF NUMBER	-

STANDARD CONSTRUCTION
11kV NOJA TYPE OSM15 RECLOSER
WITH BY-PASS AIR BREAK SWITCH
MOUNTED ON A TIMBER POLE
GENERAL ARRANGEMENT

SIZE A1 | DRAWING No 255677 | SHEET 1 | REV 5

20241022

255677-1.dgn 18/09/2025 2:09:33 PM