CONSTRUCTION

1-50
1-106

1-20

DRILLING DETAILS

F NOT MANUFACTURED IN STORE

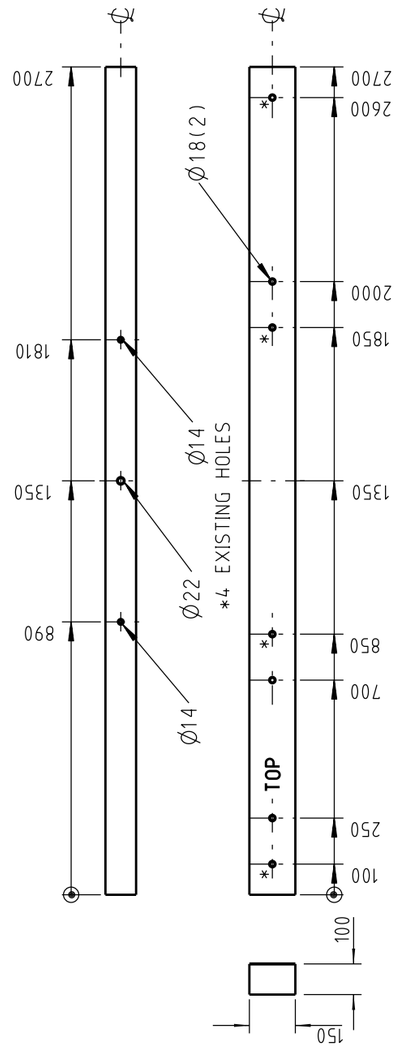

DRILL ADDITIONAL HOLES IN 2700 x 150 x 100mm CROSSARM USING STOCK CODE : H23892

G NOT MANUFACTURED IN STORE

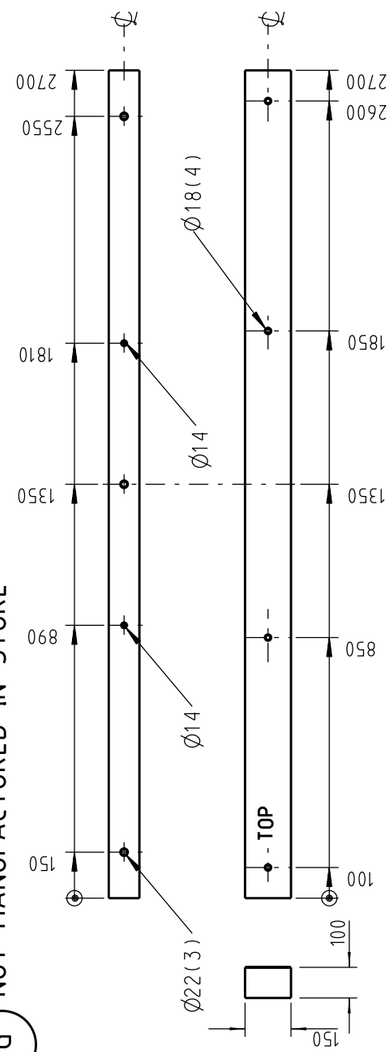

DRILL ADDITIONAL HOLES IN 2700 x 150 x 100mm CROSSARM USING STOCK CODE : H23892

ALL DIMENSIONS IN MILLIMETRES

DO NOT SCALE

CAD DRAWING
DO NOT MANUALLY AMEND

AMENDMENTS

DWN GARRY CRAIG
CHKD GARRY CRAIG
APP'D GLENN FORD

3 DATE: 02/05/2014
AUSGRID BORDER APPLIED.

NETWORK STANDARD
Ausgrid

DESIGN & ENGINEERING BRANCH
145 NEWCASTLE RD WALLSEND, NSW 2287
Ph 02 4951 9388
Fax 02 4951 9389

SCALE	1:20
DESIGNED	R.KNOWLES
DRAWN	PATRICIA RIOS
CHECKED	ROBERT KNOWLES
APPROVED	G FORD
DATE	24/06/04
PROJECT NUMBER	STD
PROJTRAK NUMBER	

STANDARD CONSTRUCTION
2700mm CROSSARMS FOR
LV 11kV AND 33kV
CONSTRUCTION DETAILS

SIZE	DRAWING No	SHEET	AMD
A3	514373	02	3

©