CONSTRUCTION	
2-2CCT	
2-1CCT 2-42CCT 2-101CCT	
2-4CCT	
2-10CCT 2-11CCT 2-12CCT 2-14CCT 2-30CCT 2-31CCT 2-37CCT 2-38CCT 2-43CCT 2-412 2-414 2-431 2-437 2-438	

DRILLING DETAILS

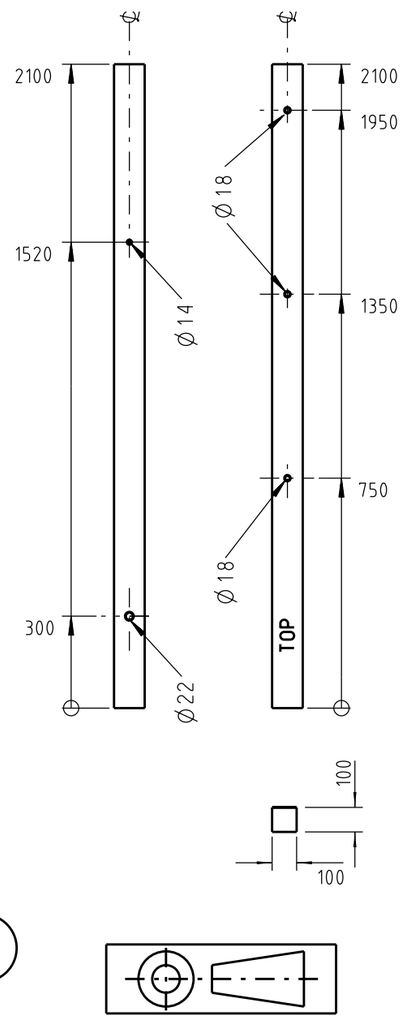

E NOT MANUFACTURED IN STORE

DRILL UNBORED 2100 x 100 x 100mm CROSSARM USING BLANK STOCK CODE :H23680

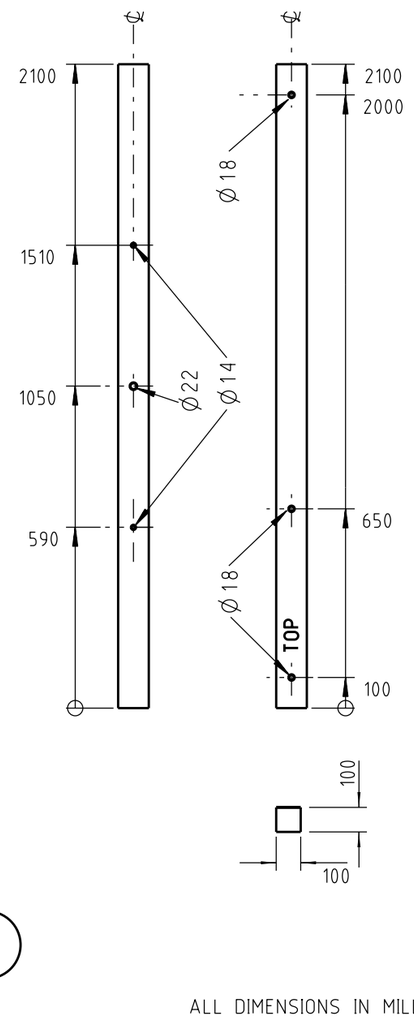

F NOT MANUFACTURED IN STORE

DRILL UNBORED 2100 x 100 x 100mm CROSSARM USING BLANK STOCK CODE :H23680

ALL DIMENSIONS IN MILLIMETRES

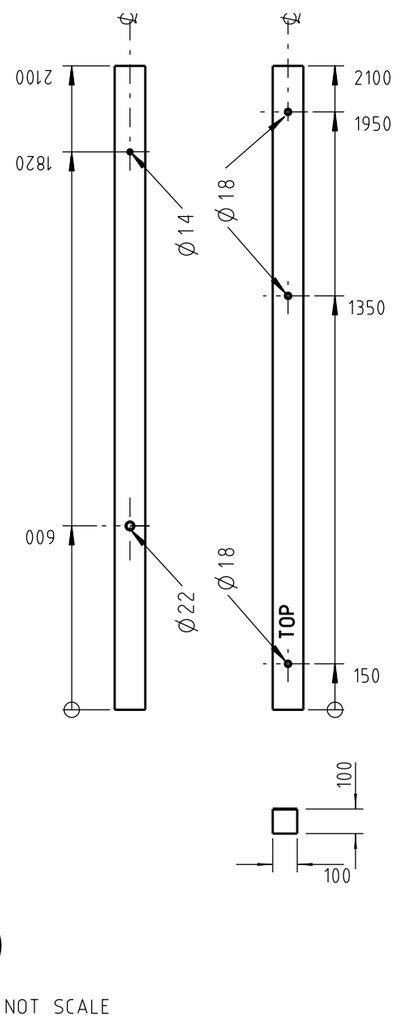

G NOT MANUFACTURED IN STORE

DRILL UNBORED 2100 x 100 x 100mm CROSSARM USING BLANK STOCK CODE :H23680

DO NOT SCALE

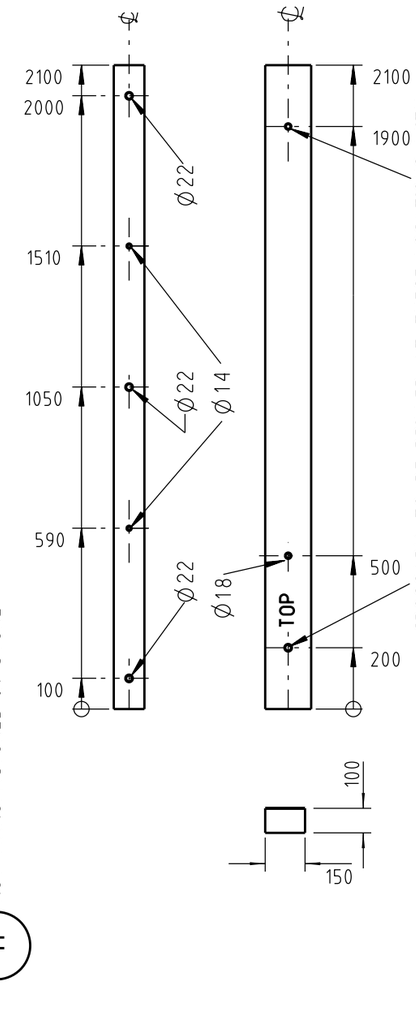

CROSSARM TO BE DRILLED AT THESE LOCATIONS WITH Ø18mm HOLES WHEN INSULATORS ARE TO BE INSTALLED.

H NOT MANUFACTURED IN STORE

DRILL UNBORED 2100 x 150 x 100mm CROSSARM USING BLANK STOCK CODE :H23745

CAD DRAWING
DO NOT MANUALLY AMEND

AMENDMENTS

DWN: GARRY CRAIG
CHKD: GARRY CRAIG
APP'D: GLENN FORD

1 DATE: 02/05/2014 AUSGRID BORDER APPLIED.

NETWORK STANDARD

Ausgrid

DESIGN & ENGINEERING BRANCH
145 NEWCASTLE RD WALLSEND, NSW 2287
Ph 02 4951 9388
Fax 02 4951 9389

SCALE	1:20
DESIGNED	PHIL JONES
DRAWN	PATRICIA RIOS
CHECKED	PHIL JONES
APPROVED	STEPHEN CONNOR
DATE	05/12/06
PROJECT NUMBER	STD
PROJTRAK NUMBER	

STANDARD CONSTRUCTION
2100mm CROSSARMS FOR
LV 11kV AND 33kV
CONSTRUCTION DETAILS

SIZE	DRAWING No	SHEET	AMD
A3	514374	02	1

20110901

©