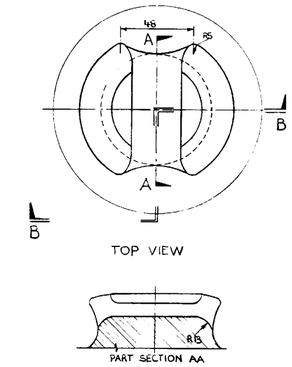

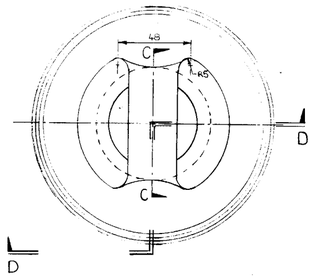

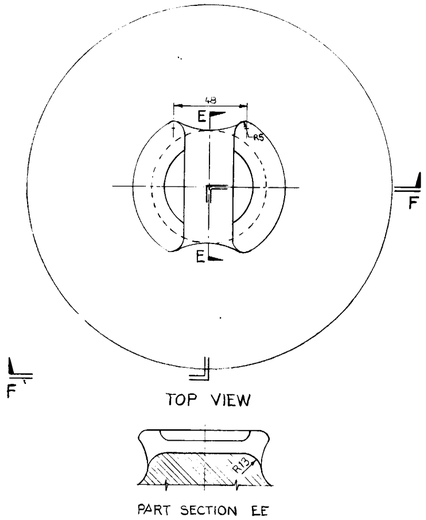

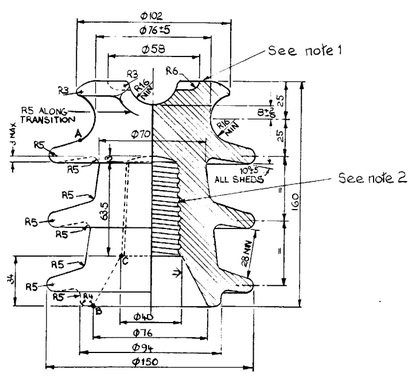

SECTION BB

TYPE/ALP/11/275

(See note 3)

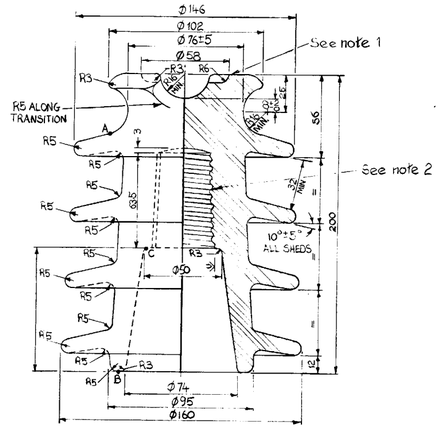

SECTION DD

TYPE ALP/22/450

(See note 3)

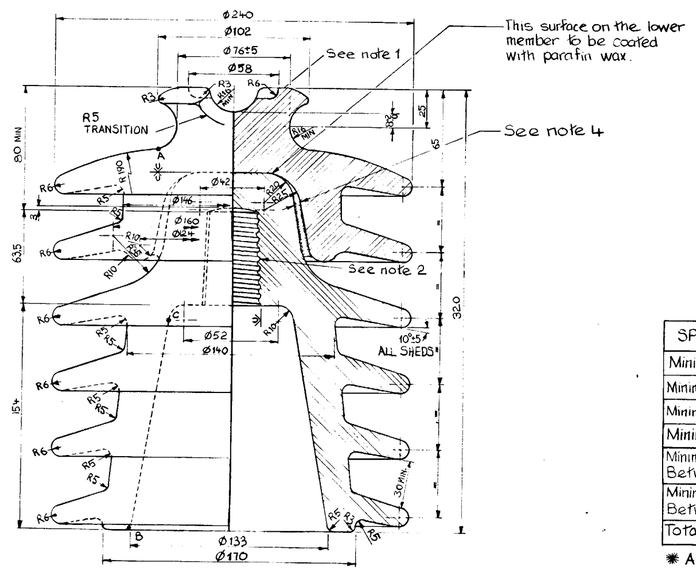

SECTION FF

TYPE ALP/33/920

(See note 3)

Notes

1. Unglazed setting surface for firing may be provided.
2. Threads to be pattern 'C' in accordance with Australian Standard 1154, Part 2. (1985)
   A threaded non-ferrous metal insert may be fitted as an alternative.
3. Material : Porcelain
   Finish : Glazed all over except for surfaces marked thus ✱
   Colour : To be specified.
   Insulator shall conform to & be tested in accordance with AS.2947.1 - 1989 and A.S.1931 - 1976
4. These surfaces to be sanded, over glaze. (ref. 9D)
   Before sanding there is to be a 5mm gap between surfaces. Before cementing members together bitumen paint shall be applied over sanded surfaces. Care shall be taken to ensure members are cemented together concentrically.

SPECIFIC REQUIREMENTS	TYPE		
	ALP/11/275	ALP/22/450	ALP/33/920
Minimum Mechanical Strength	7 kN	11 kN	11 kN
Minimum Impulse Withstand	105 kV	150 kV	220 kV
Minimum Wet Withstand ✱	30 kV	50 kV	90 kV
Minimum Puncture ✱	105 kV	150 kV	210 kV
Minimum Creepage Distance Between A & B	235 mm	365 mm	755 mm
Minimum Creepage Distance Between B & C	40 mm	85 mm	165 mm
Total Creepage Distance	275 mm	450 mm	920 mm

✱ At Power Frequency 50 Hz.

AMENDMENT

1. DRAWING BROUGHT UP TO DATE TO AUST. STANDARDS 2947.1 (1989) AND 1931 (1985). A.J.E. 25/10/90 P.N° 24690 Ckd: App:

100 MM. ON ORIGINAL

UNLESS OTHERWISE STATED ALL DIMENSIONS ARE IN MILLIMETRES

DRAWN	M.CONTE
DATE	
SCALE	1:2
CHECKED	BJT
EE-DC	
PN 19592	

OVERHEAD CONSTRUCTION

AERODYNAMIC LINE PIN INSULATORS

TYPES ALP/11/275, ALP/22/450 & ALP/33/920

DETAILS

SYDNEY COUNTY COUNCIL

SIZE	NUMBER	AMD.
A1	61502	1