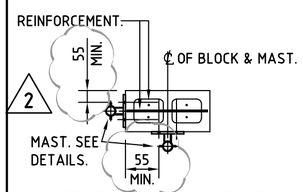

TYPICAL MOUNTING LOCATION ON BLOCK (FRONT OR SIDE)

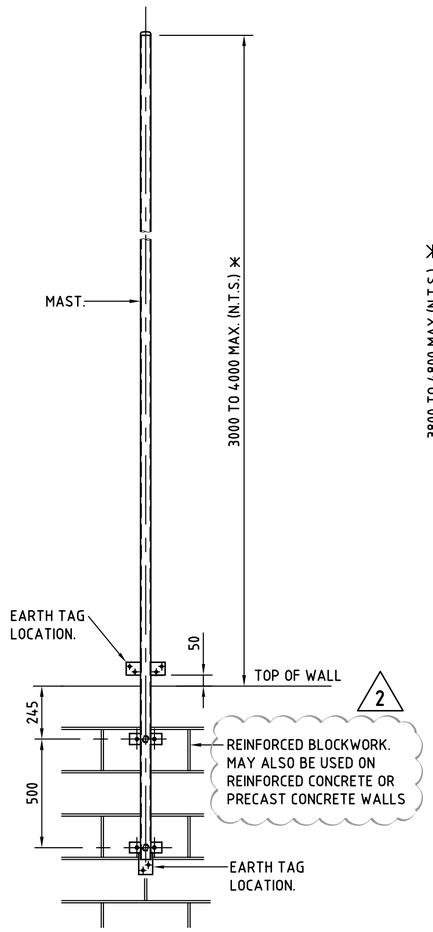

GENERAL ARRANGEMENT

✳ REFER TO ELECTRICAL LAYOUT OF EQUIPMENT DRAWING FOR LOCATION, LENGTH AND NUMBER OF LIGHTNING MASTS REQUIRED.

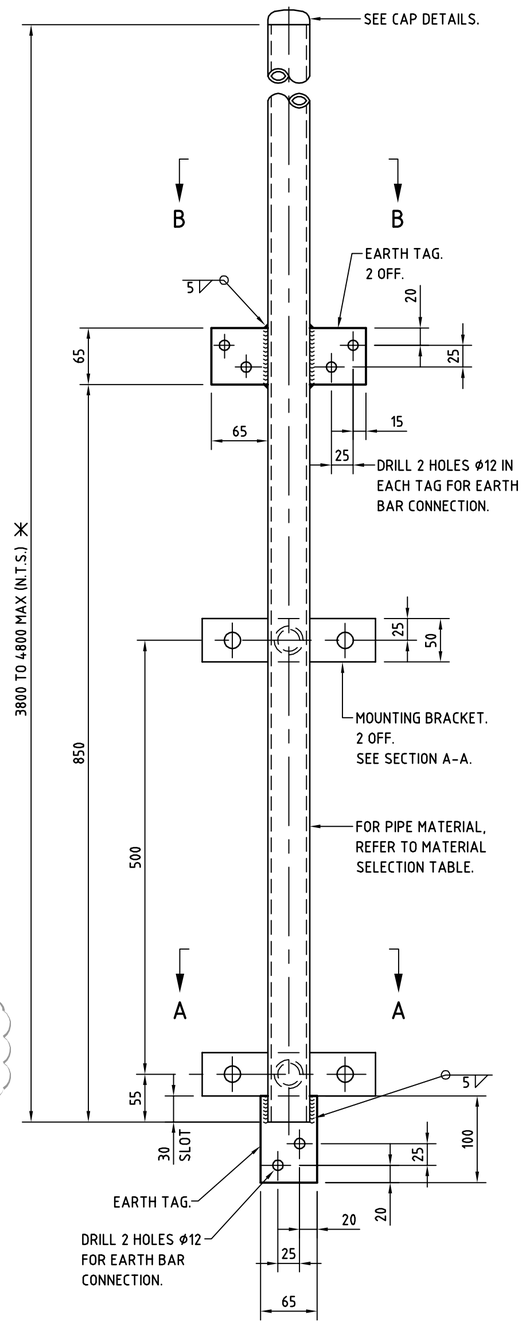

MAST

MATERIAL : REFER TO ADJACENT TABLE.

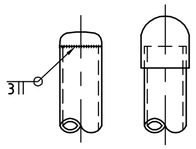

CAP DETAILS

WELD-ON OR THREADED BSP.

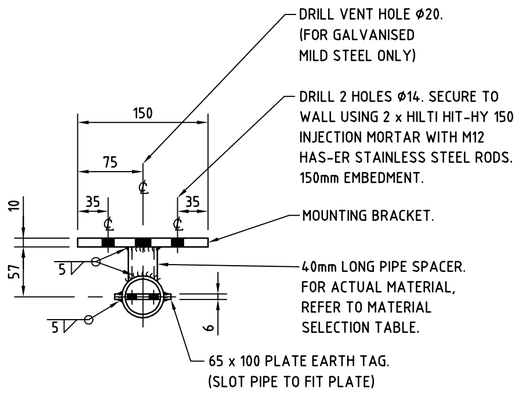

SECTION A - A

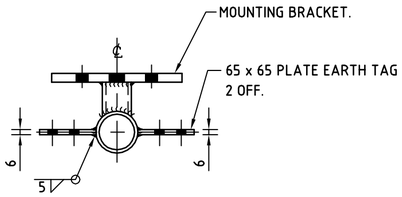

SECTION B - B

MATERIAL SELECTION TABLE

STAINLESS STEEL MAST - GRADE 316 & 316L
MAST - 48.26 O.D. x 3.68 WALL THK. S.S. PIPE
SPACER - 33.4 O.D. x 4.55 WALL THK. S.S. PIPE
EARTH TAG - GRADE 316 BAR
MOUNTING BRACKET - GRADE 316 BAR
MILD STEEL MAST - HOT DIP GALVANISED
MAST - 48.3 O.D. x 3.2 WALL THK. M.S. PIPE
SPACER - 33.7 O.D. x 4.0 WALL THK. M.S. PIPE
EARTH TAG - M.S. BAR
MOUNTING BRACKET - M.S. BAR

NOTE : THE USE OF STAINLESS STEEL OR GALVANISED MILD STEEL IS TO BE DETERMINED AFTER CONSIDERING THE LOCATION & THE LOCAL ENVIRONMENTAL CONDITIONS.

GENERAL NOTES

1. ALL STEELWORK TO BE FABRICATED IN ACCORDANCE WITH AS 4100.
2. AFTER FABRICATION, ALL BURRS AND SHARP EDGES TO BE REMOVED.
3. QUANTITIES STATED ARE FOR ONE COMPLETE STRUCTURE.

MILD STEEL NOTES

1. UNLESS NOTED OTHERWISE:
   (a) ALL HOT ROLLED FLATS TO BE GRADE 250 MINIMUM IN ACCORDANCE WITH AS 1594.
   (b) ALL HOT ROLLED SECTIONS TO BE GRADE 250 MINIMUM IN ACCORDANCE WITH AS 3679.
   (c) ALL HOLLOW SECTIONS TO BE GRADE C350 IN ACCORDANCE WITH AS 1163.
2. ALL WELDING TO BE IN ACCORDANCE WITH AS 1554 PART 1.
3. CONSUMABLES (ELECTRODES) SHALL BE MATCHED WITH THE STEEL TYPE IN COMPLIANCE WITH AS/NZS 1554.1 TABLE 4.6.1(A) & THE RELEVANT COLUMNS OF THE TABLE DEPENDING ON THE TYPE OF WELDING PROCESS BEING UNDERTAKEN.
4. UNLESS NOTED OTHERWISE:
   (a) ALL WELDS SHALL BE 6mm CONTINUOUS FILLET WELDS, CATEGORY GP.
   (b) BUTT WELDS SHALL BE CONTINUOUS FULL PENETRATION, CATEGORY SP.
   (c) ALL WELDS TO BE CARRIED OUT IN THE SHOP UNLESS NOTED AS `WELD ON SITE'.
5. WELDS SHALL BE INSPECTED TO AS/NZS 1554.1 CLAUSE 7.3 (VISUAL INSPECTION OF WORK) UNLESS THE WELDING PROCESS IS SUPERVISED AND CARRIED OUT BY QUALIFIED PERSONNEL AS DEFINED IN AS/NZS 1554.1 CLAUSE 4.12.1 AND CLAUSE 4.12.2.
6. AFTER FABRICATION, ALL WELDS TO BE CHIPPED FREE OF SLAG.
7. AFTER FABRICATION, ALL STEELWORK TO BE HOT DIP GALVANISED TO AS 4680.
8. AFTER GALVANISING, ALL HOLES TO BE CLEARED AND SHARP EDGES TO BE REMOVED.
9. WHERE THE GALVANISING FINISH HAS BEEN DAMAGED, AREA TO BE TREATED WITH COLD GALVANISING PAINT SIMILAR TO ZINCFIX. COATINGS TO BE APPLIED IN ACCORDANCE WITH THE MANUFACTURERS INSTRUCTIONS.
10. ALL BOLTS, NUTS AND WASHERS TO BE HOT DIP GALVANISED TO AS 1214.
11. ALL BOLTS TO BE GRADE 4.6/s TO AS 1111.

STAINLESS STEEL NOTES

1. UNLESS NOTED OTHERWISE:
   (a) ALL HOT ROLLED PLATE TO BE IN ACCORDANCE WITH ASTM A240.
   (b) ALL HOT ROLLED SECTIONS TO BE IN ACCORDANCE WITH ASTM A276.
   (c) ALL HOLLOW SECTIONS TO BE IN ACCORDANCE WITH ASTM A312.
2. ALL WELDING TO BE IN ACCORDANCE WITH AS 1554 PART 6.
3. CONSUMABLES (ELECTRODES) SHALL BE MATCHED WITH THE STEEL TYPE IN COMPLIANCE WITH AS/NZS 1554.6 CLAUSE 2.3 & TABLE 4.5.1 & THE RELEVANT COLUMNS OF THE TABLE DEPENDING ON THE TYPE OF WELDING PROCESS BEING UNDERTAKEN.
4. UNLESS NOTED OTHERWISE:
   (a) ALL WELDS SHALL BE 6mm CONTINUOUS FILLET WELDS WITH AN EXTERNAL WELD QUALITY OF CLASS C, GRADE 2.
   (b) BUTT WELDS SHALL BE CONTINUOUS FULL PENETRATION WITH AN EXTERNAL WELD QUALITY OF CLASS C, GRADE 2.
5. WELDS SHALL BE INSPECTED TO AS/NZS 1554.6 CLAUSE 7.3 (VISUAL INSPECTION OF WORK) UNLESS THE WELDING PROCESS IS SUPERVISED AND CARRIED OUT BY QUALIFIED PERSONNEL AS DEFINED IN AS/NZS 1554.6 CLAUSE 4.12.1 AND CLAUSE 4.12.2.
6. AFTER FABRICATION, ALL WELDS TO BE CHIPPED FREE OF SLAG & CLEANED WITH A STAINLESS STEEL WIRE BRUSH.
7. ALL BOLTS, NUTS AND WASHERS TO BE GRADE 316 STAINLESS STEEL.

CAD DRAWING
DO NOT MANUALLY AMEND

AMENDMENTS
1. TOTAL HEIGHT OF MAST WAS 3800mm. 65 x 100 EARTH TAG PLATE ADDED. MOUNTING BRACKET CHANGED. TOP EARTH TAG PLATES CHANGED SECTION B-B ADDED. DATE: 11-11-2010 APPROVED: M. VENDRIG

ISSUED FOR CONSTRUCTION. NOTE ADDED
2 DWN: A. SPITERI CHKD: D. STANBURY DATE: 16-05-11
APP'D by: D. STANBURY

0 0.25 0.5 m
METRES ON ORIGINAL DRAWING AT SCALE 1:5

EnergyAustralia®
DESIGN SERVICES
24 CAMPBELL ST SYDNEY, NSW 2000

SCALE	1 : 5 , 20
DESIGNED	COLIN SAWDY
DRAWN	COLIN SAWDY
CHECKED	MANCHULA VENDRIG
APPROVED	MANCHULA VENDRIG
DATE	20.01.2009
PRJTRK No.	-
PROJECT NUMBER	ES-208-25-9-7

OUTDOOR SUBSTATIONS
REINFORCED BLOCKWORK TX BAY WALLS
WALL MOUNTED LIGHTNING MAST
ARRANGEMENT AND DETAILS

DRAWING No 202164 | SHEET 1 | AMD 2 | SIZE A2