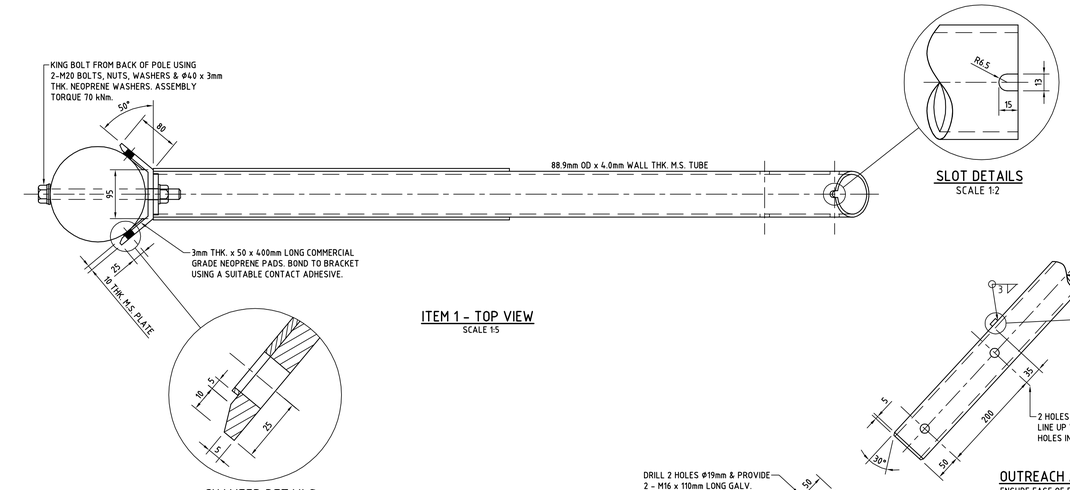

ITEM 1 - TOP VIEW
SCALE 1:5

CHAMFER DETAILS
SCALE 1:1

SLOT DETAILS
SCALE 1:2

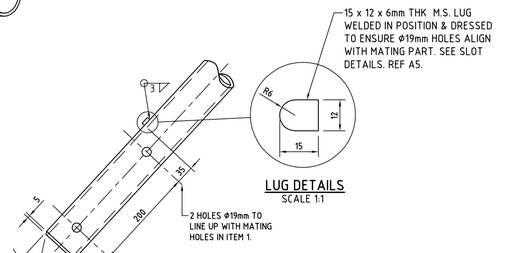

LUG DETAILS
SCALE 1:1

OUTREACH ARM CONNECTION DETAILS
ENSURE EASE OF FIT BETWEEN MATING PARTS 1 AND 2.

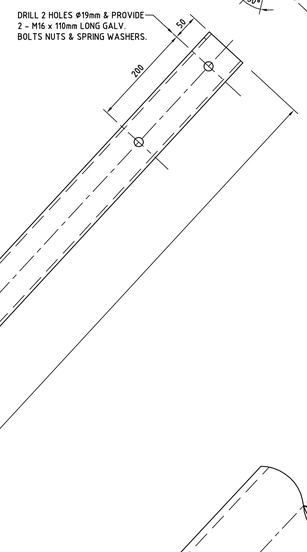

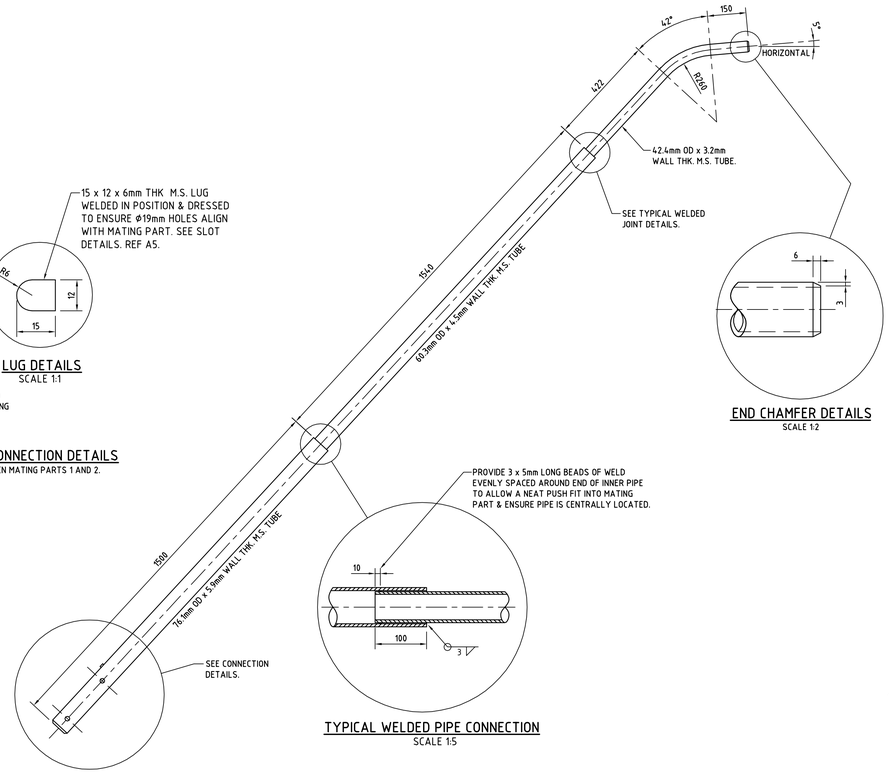

ITEM 2 - OUTREACH ARM
MASS 37kg.
SCALE 1:10

END CHAMFER DETAILS
SCALE 1:2

TYPICAL WELDED PIPE CONNECTION
SCALE 1:5

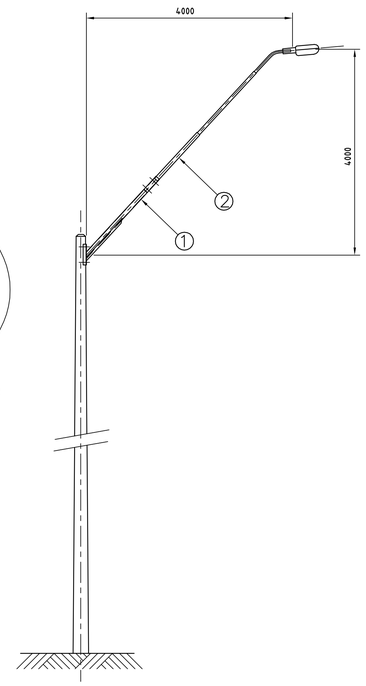

ARRANGEMENT
SCALE 1:50

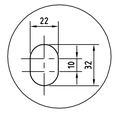

SLOTTED HOLE DETAILS

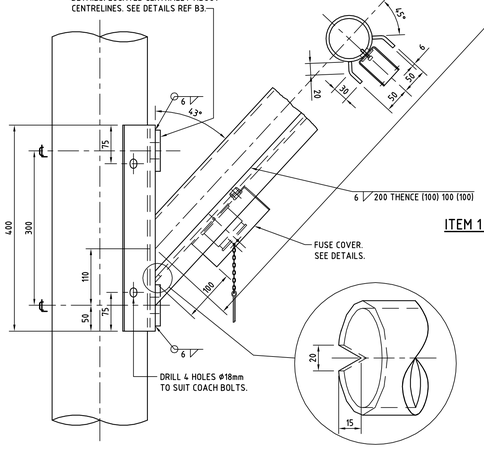

ITEM 1 - BASE MOUNTING BRACKET
MASS 36kg.
SCALE 1:5

WATER DRAINAGE NOTCH
SCALE 1:2

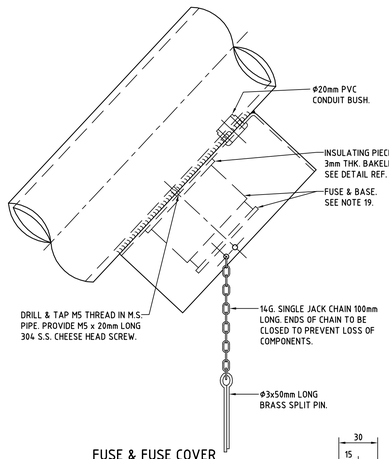

FUSE & FUSE COVER SIDE VIEW
SCALE 1:2

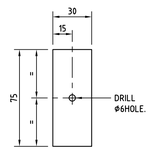

INSULATING PIECE
MATERIAL : 3mm BAKELITE SHEET.
SCALE 1 : 2

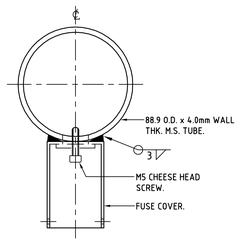

END VIEW

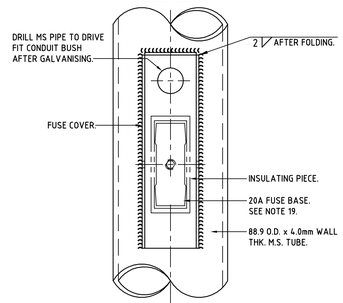

FUSE & FUSE COVER BOTTOM VIEW
SCALE 1:2
MATERIAL - 20A FUSE
- 1.6mm MS SHEET.
- M5 x 20 mm LONG 304 S.S. CHEESE HEAD SCREW

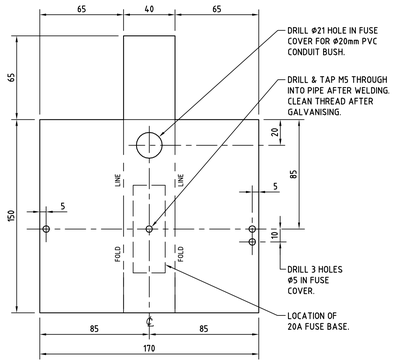

DEVELOPMENT OF FUSE COVER
MATERIAL : 1.6mm THK. MILD STEEL.

REFERENCE DRAWINGS

STREET LIGHTING:- RANGE OF POLE & WALL MOUNTED STREET LIGHTING BRACKETS B1-66251

NOTES

1. ALL STEELWORK TO BE FABRICATED IN ACCORDANCE WITH AS 4100.
2. UNLESS NOTED OTHERWISE:
   (a) ALL HOT ROLLED FLATS TO BE GRADE 250 MINIMUM IN ACCORDANCE WITH AS 1594.
   (b) ALL HOT ROLLED SECTIONS TO BE GRADE 250 MINIMUM IN ACCORDANCE WITH AS 3679.
   (c) ALL HOLLOW SECTIONS TO BE GRADE C350 IN ACCORDANCE WITH AS 1163.
3. AFTER FABRICATION, ALL BURRS AND SHARP EDGES TO BE REMOVED.
4. ALL WELDING TO BE IN ACCORDANCE WITH AS 1554 PART 1.
5. CONSUMABLES (ELECTRODES) SHALL BE MATCHED WITH THE STEEL TYPE IN COMPLIANCE WITH AS/NZS 1554.1 TABLE 4.6.1(A) & THE RELEVANT COLUMNS OF THE TABLE DEPENDING ON THE TYPE OF WELDING PROCESS BEING UNDERTAKEN.
6. UNLESS NOTED OTHERWISE:
   (a) ALL WELDS SHALL BE 6mm CONTINUOUS FILLET WELDS, CATEGORY GP.
   (b) BUTT WELDS SHALL BE CONTINUOUS FULL PENETRATION, CATEGORY SP.
   (c) ALL WELDS TO BE CARRIED OUT IN THE SHOP UNLESS NOTED AS `WELD ON SITE'.
7. WELDS SHALL BE INSPECTED TO AS/NZS 1554.1 CLAUSE 7.3 (VISUAL INSPECTION OF WORK) UNLESS THE WELDING PROCESS IS SUPERVISED AND CARRIED OUT BY QUALIFIED PERSONNEL AS DEFINED IN AS/NZS 1554.1 CLAUSE 4.12.1 AND CLAUSE 4.12.2.
8. AFTER FABRICATION, ALL WELDS TO BE CHIPPED FREE OF SLAG.
9. AFTER FABRICATION, ALL STEELWORK TO BE HOT DIP GALVANISED TO AS 4680.
10. AFTER GALVANISING, ALL HOLES TO BE CLEARED AND SHARP EDGES TO BE REMOVED.
11. WHERE THE GALVANISING FINISH HAS BEEN DAMAGED, AREA TO BE TREATED WITH COLD GALVANISING PAINT SIMILAR TO ZINCFIX. COATINGS TO BE APPLIED IN ACCORDANCE WITH THE MANUFACTURERS INSTRUCTIONS.
12. ALL BOLTS, NUTS AND WASHERS TO BE HOT DIP GALVANISED TO AS 1214.
13. ALL BOLTS TO BE GRADE 4.6/s TO AS 1111.
14. BRACKET IS NOT TO BE USED ON TIMBER POLES LESS THAN 200mm DIA AT THE POINT OF CONNECTION.
15. TOTAL MASS OF BRACKET IS 58Kg.
16. FOR DELIVERY, BOTH SECTIONS OF BRACKET ARE TO BE WIRED TOGETHER WITH GALVANISED STEEL WIRE.
17. BRACKET TO BE SUPPLIED TO THE FIELD WITH BOTH PARTS BOLTED TOGETHER.
18. IF ANY MATERIAL SIZE DETAILED IS CHANGED, PRIOR APPROVAL MUST BE OBTAINED FROM AUSGRID.
19. THE FUSE HOLDER SHALL BE A FULLY SHROUDED 20A, FRONT CONNECTED TYPE REFERENCE 'F1' TO AS 60269.2.1. THE FUSE LINK SHALL BE 10A, REFERENCE 'F1' TO AS 60269.2.1.

CAD DRAWING
DO NOT MANUALLY AMEND

AMENDMENTS

1. REDRAWN TO CURRENT DESIGN METHODS. 5-9-88. C.SAWDY. PROD. No. 23489. CHECKED KEM.
2. SLOTTED HOLES ADDED TO BASE BRACKET. REF. E2. NEOPRENE PADS ADDED. REF. B2. 2-6-89. C.SAWDY PROD. No. 24010. CHECKED KEM.
3. REDRAWN ON ACAD. DRAWING SIZE FROM A1 TO B1. 20A FUSE BASE. (MEM OR SIMILAR) WITH FUSE COVER & DETAILS ADDED. REF. F2. FEBRUARY 92. AMC. PROD. No. 25261. CHECKED KEM.
4. VERTICAL DIM 65 WAS 55 REF. D-9. MEM 700 OR SIMILAR WAS MEM OR SIMILAR. REF F6. DECEMBER 92 RVG PROD. No. 28980 CHECKED C.J.S.
5. REF. TO PIPE DIAMETERS DELETED. MARCH 93 RVG PROD. No. 83137 CHECKED C.J.S.
6. MEM ADV20FF FUSE BASE WAS MEM 700 (REF F6). 15.12.00 JC CHECKED PIE APPROVED PIE
7. DRAWING BORDER UPDATED. FUSE COVER HAS BEEN REDESIGNED TO ALLOW TEK SCREWS. NOW WELDED IN POSITION. NOTES UPDATED. FUSE HOLDER & FUSE LINK CLARIFIED. SEE NOTE 19. 19.02.2013 C.SAWDY. APPROVED: PHIL HUDSON

0 0.25 0.5 m
METRES ON ORIGINAL DRAWING AT SCALE 1:5

Ausgrid
MECHANICAL DESIGN
570 GEORGE STREET
SYDNEY NSW 2000

SCALE	AS SHOWN
DESIGNED	C.SAWDY
DRAWN	C.SAWDY
CHECKED	KEM
APPROVED	JH
DATE	01.09.1988
PRJTRK No.	23489
PROJECT NUMBER	

STREET LIGHTING
4m OUTREACH
ELEVATED POLE MOUNTED BRACKET
TYPE 7
ARRANGEMENT AND DETAILS

DRAWING No 66439 SHEET 1 AMD 7 SIZE B1

20111014

©